# AQS & day-1 instrumentation

Dr Alberto De Fanis
WP85, Scientific Instrument SQS
Instrument Scientist

Satellite meeting soft X-ray instruments SQS and SCS
Hamburg, January 24th 2017

# SQS = AQS + NQS

# SQS: Small Quantum Systems

## AQS: Atomic Quantum Systems

## NQS: Nano Quantum Systems

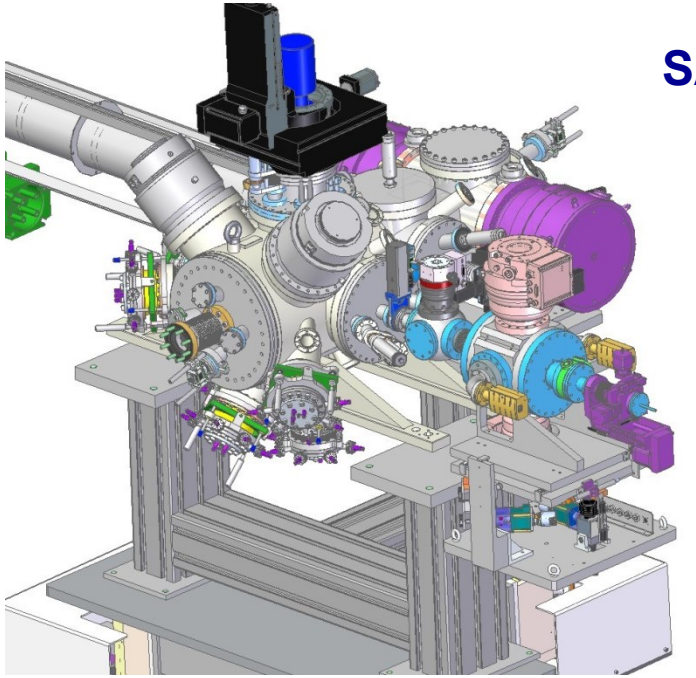

**SASE3: 250 – 3000 eV**

**N x hν**

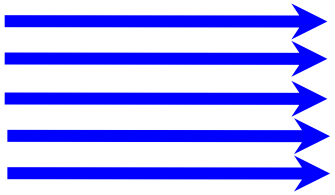

**2 – 100 fs**

**0.2 – 11 mJ**

$10^{14}$ photons/pulse

$10^{18}$ photons/s

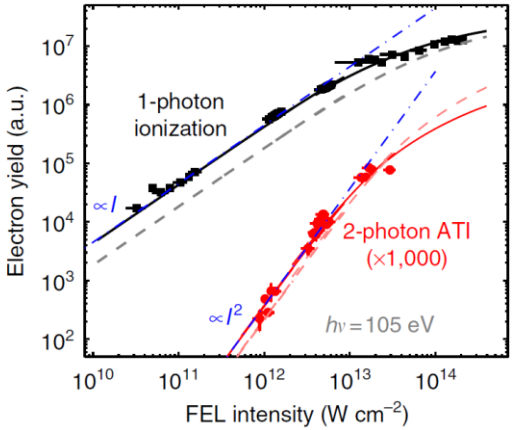


Mazza *et al*. **5** 3648 Nat. Commun. (2015)

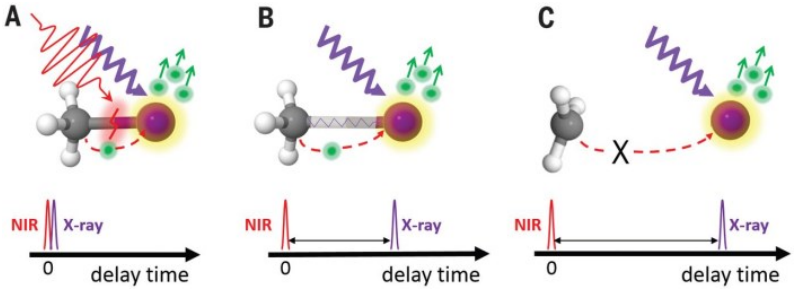


Erk *et al* **345** 288 Science (2014)

# The AQS instrument

- Non-linear X-ray physics on gas samples: atoms, molecules, and clusters
- Time-resolved fs molecular dynamics: isomerization, fragmentation, …

**Techniques**:

- Angle resolved electron spectroscopy
- Ion spectroscopy
- Multi-particle coincidence: electrons-electrons, ions-ions, electrons-ions
- XUV fluorescence
- Pump-probe: XUV + IR

| SQS specifications |
|---|
| 0.25-3000 keV |
| 11 mJ pulse energy |
| 2-100 fs pulse duration |
| 1 μm focus size |
| $10^{19}$ W/cm$^2$ |
| High repetition machine: 600μs 4.5MHz trains @ 10Hz |

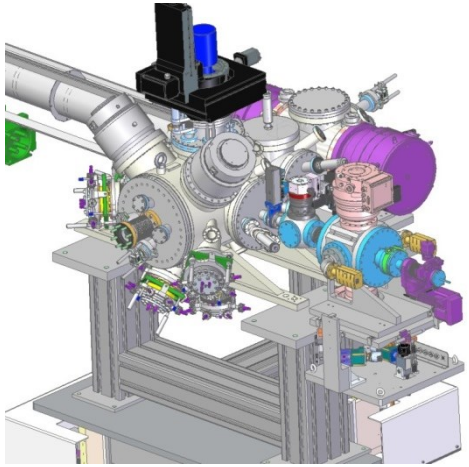

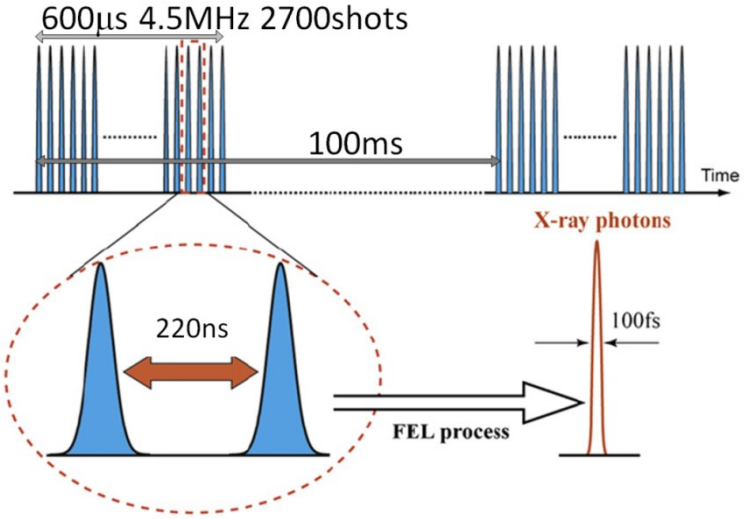

# SQS experimental hutch

- Accessible by XFEL staff summer 2017
- Radiation shielded
- Climatized ±0.5 or ±0.1C
- Chicanes, cable trays, …

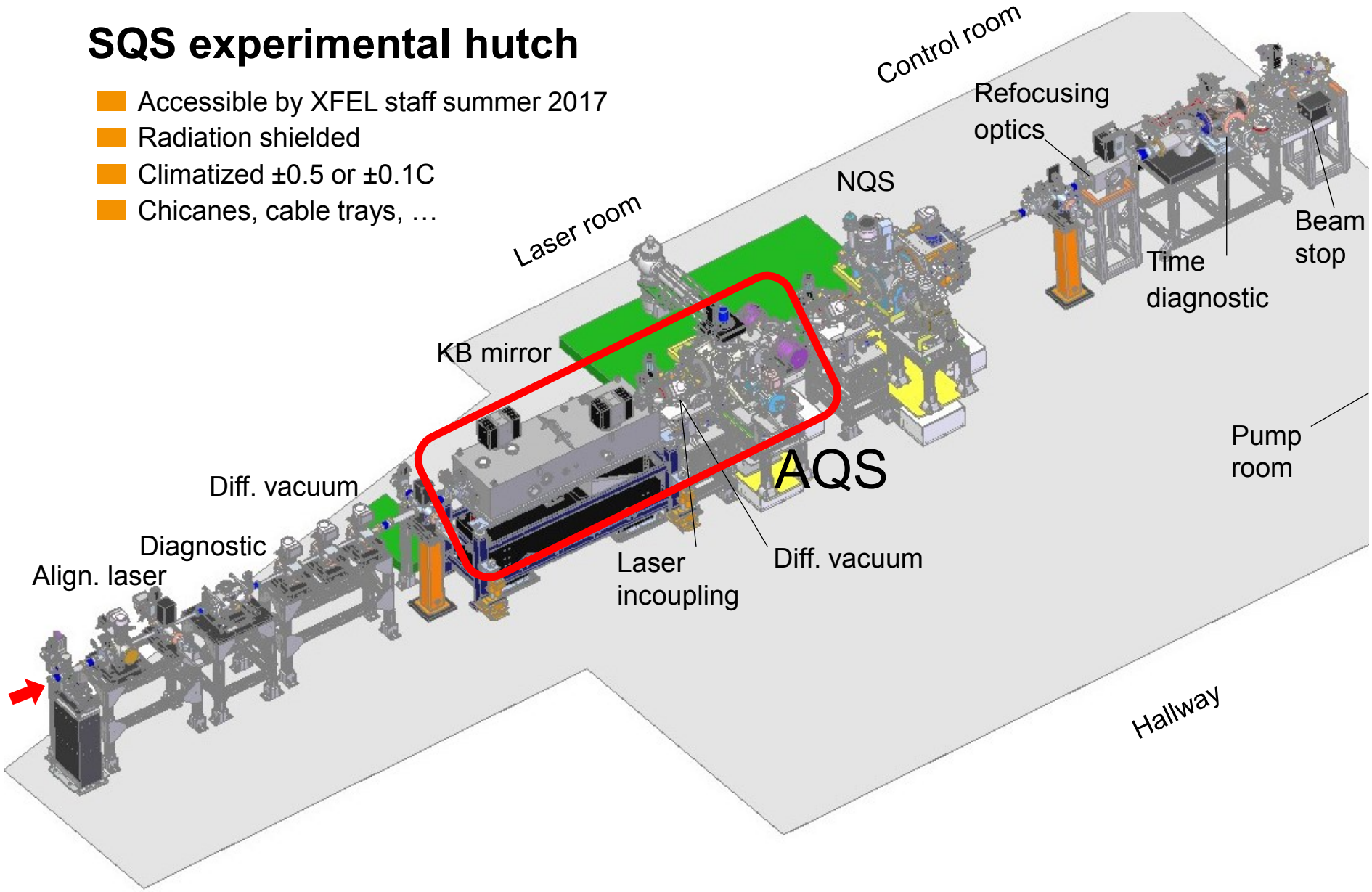

# Geometry of the SQS-AQS instrument

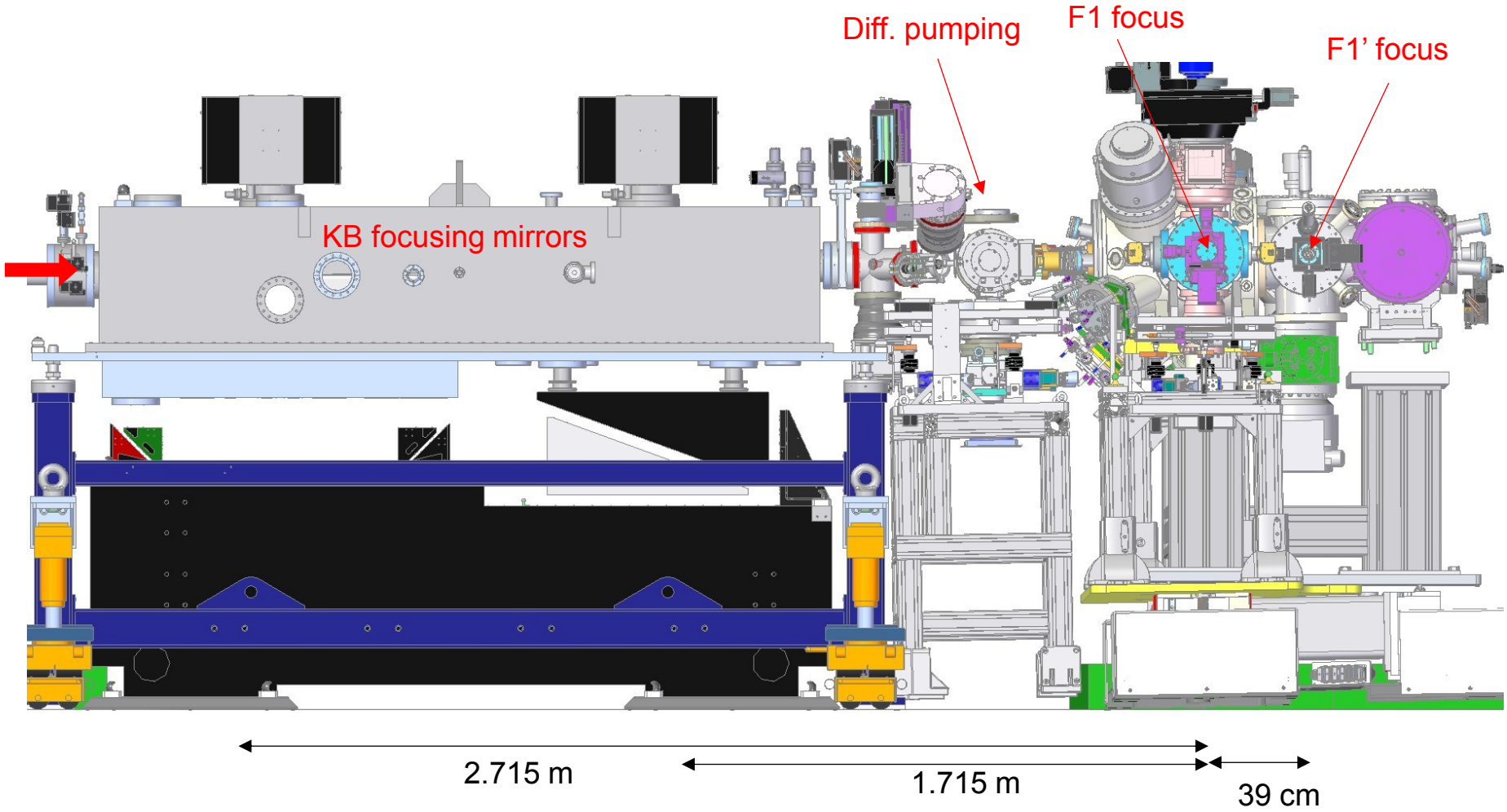

# Spectrometers of the SQS-AQS instrument

| | Position | Electron Energy Resolution | Angle Acceptance | Electrons | | | Ions | Photons |
|---|---|---|---|---|---|---|---|---|
| | | | | | Kinetic Energy | Rep. rate | | |
| eTOF | F1 | 10,000 | ~0.14% of 4π | Yes | ≤5000 eV | ≤4.5 MHz | Yes (one) | No |
| VMI | F1 | 100 | ~100% of 4π | Yes | ≤1200 eV | ≤4.5 MHz, or ≤10 Hz | Yes | No |
| Magnetic bottle | F1’ | 50 | ~100% of 4π | Yes | ≤300 eV | ≤120 kHz | Yes (day-2) | No |
| XUV spectrometer | F1’ | - | - | No | - | ≤4.5 MHz | No | Yes |

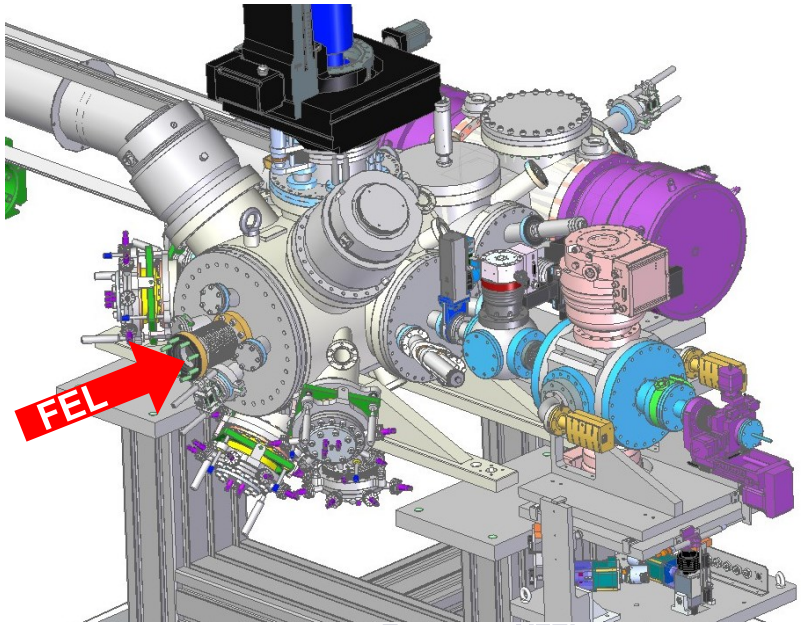


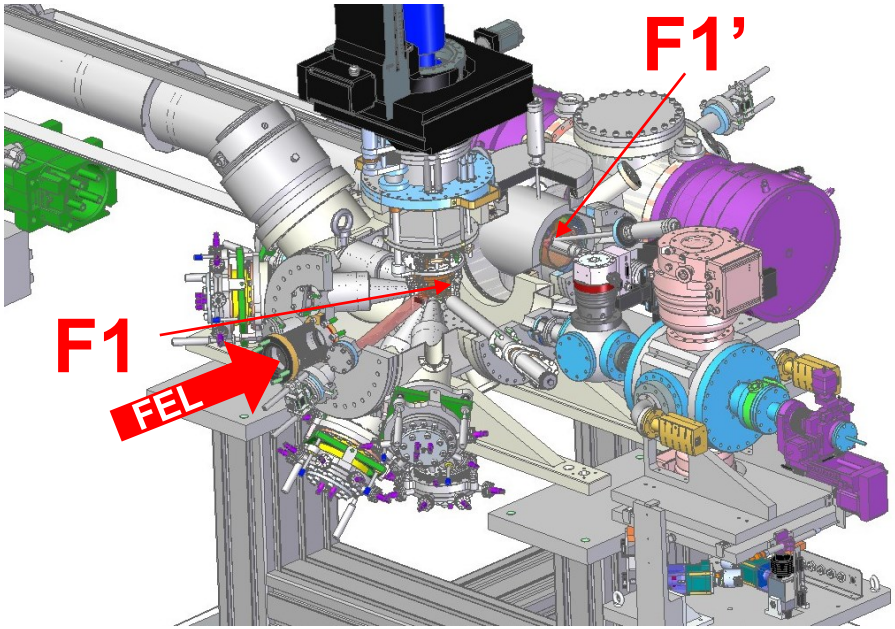

# Electron time-of-flight spectrometer(s)

- #1: commissioned at PETRA PO4, Aug 2016
- #2-3 in production, ready summer 2017
- #4-6, ready Dec 2017
- Retardation ≤ 5 keV
- Mu-metal or Helmholtz coils

| eTOF specifications | |
|---|---|
| Length | 400mm |
| Detector | Hamamatsu, MCP, diam. 27mm, single anode |
| Readout | Digitizer 3GHz 10GS/s 14bit |
| Acceptance | 0.14% of 4π |

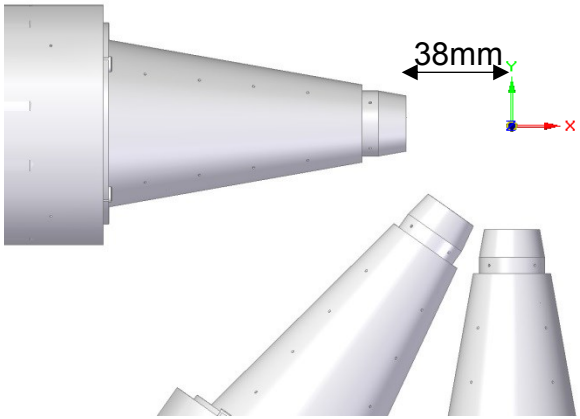


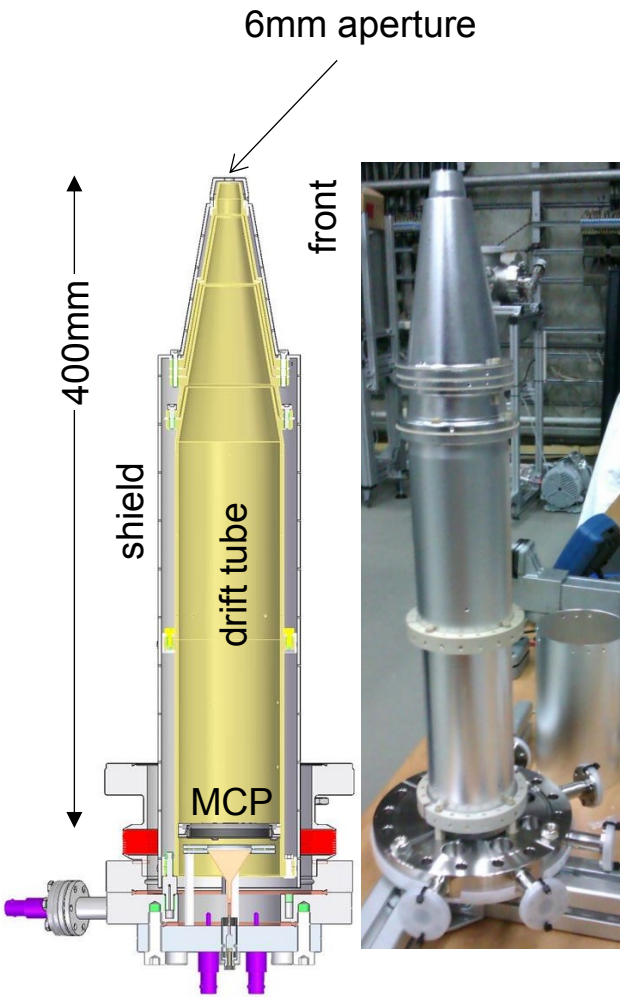

# Electron time-of-flight spectrometer(s)

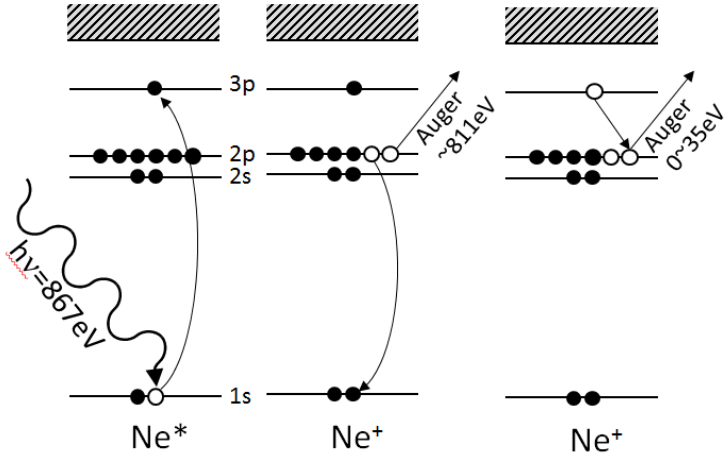


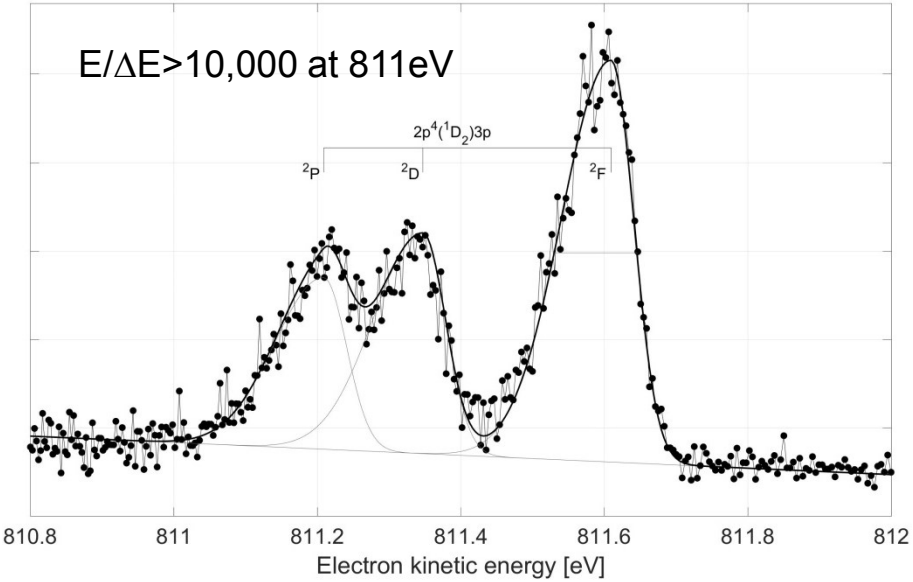


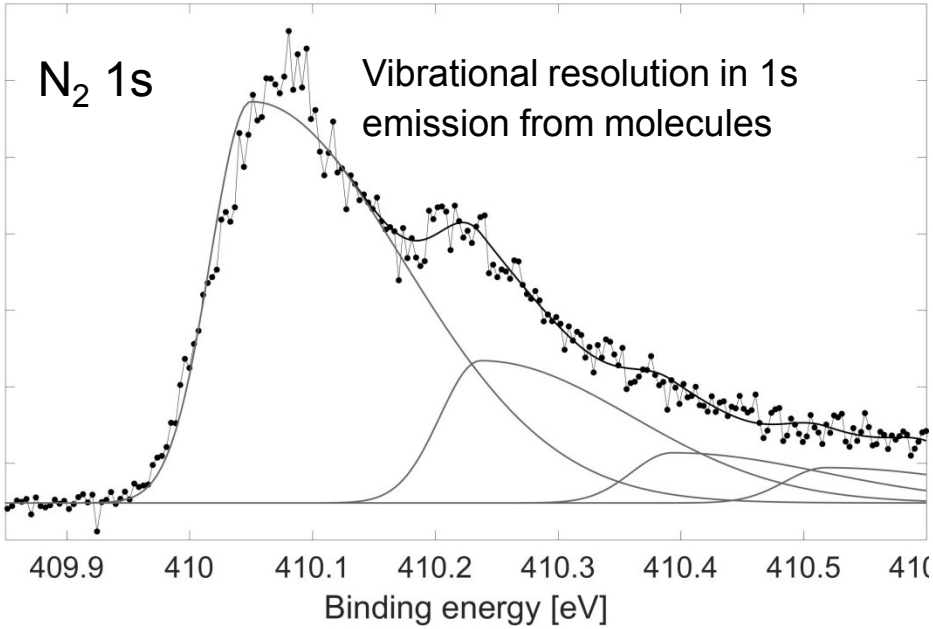


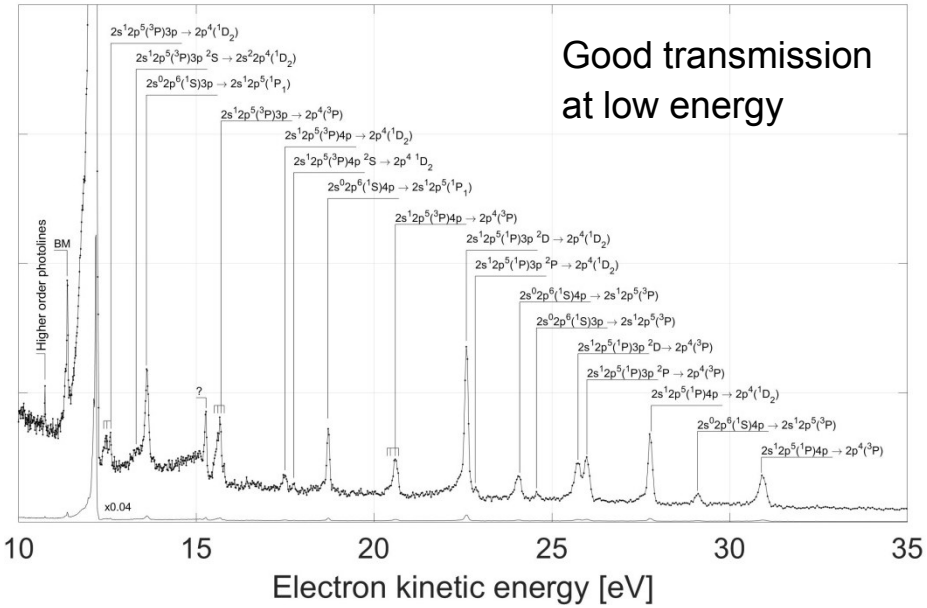

# Velocity Map Imaging spectrometer

- Designed by S.Deinert, T.Mazza, I.Schevchuk, ready Sept 2017
- Molecular jet (Y.O.) ready to be commissioned
- Energy ≤500 eV (mode1), ≤1200 eV (mode2)
- Resolution ΔE/E now 3%, aiming for 1%
- Detector: Phosphor-CMOS 10 Hz or Delay-line 4.5 MHz
- Spectroscopy or coincidence possible
- Can run in parallel with the vertical

2d position sensitive detector

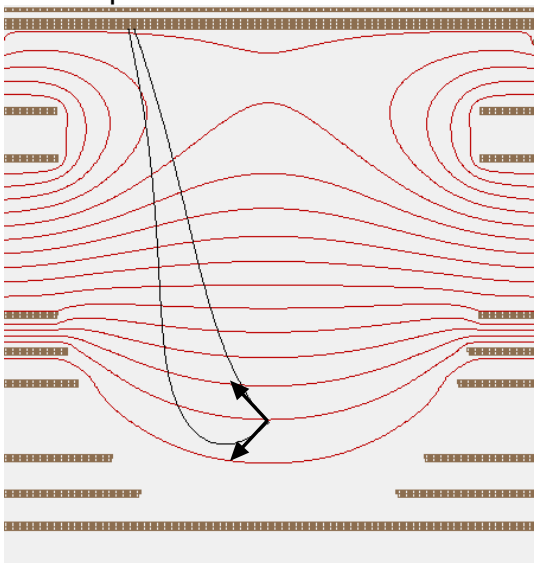

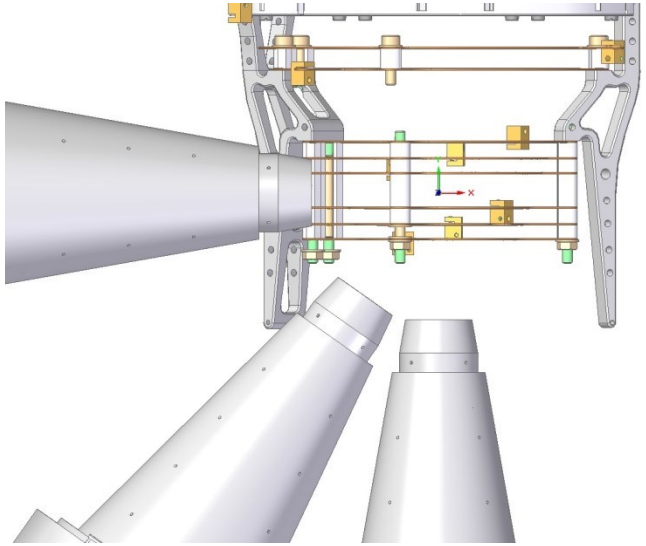

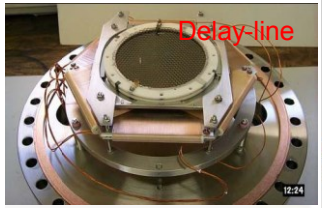



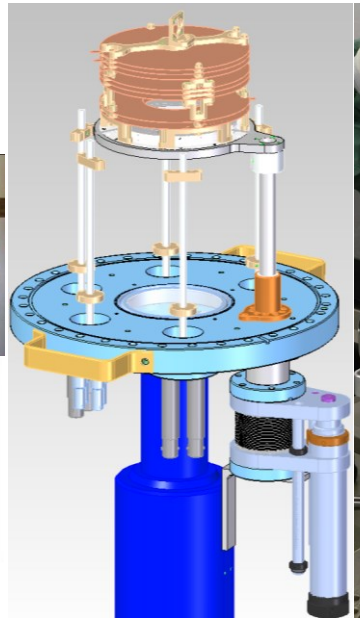

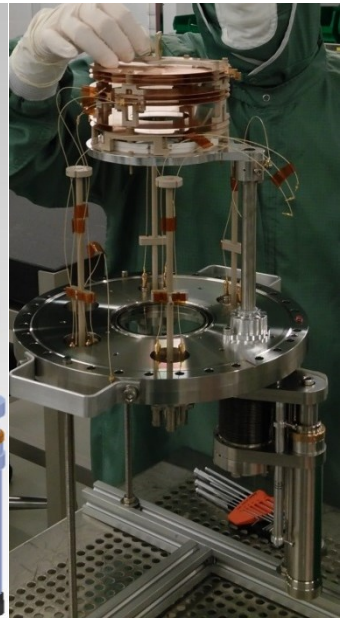

# Velocity Map Imaging spectrometer

- Prototype commissioned at PETRA PO4, May 2016

Ar 2p photoelectrons, E ≤ 30 eV

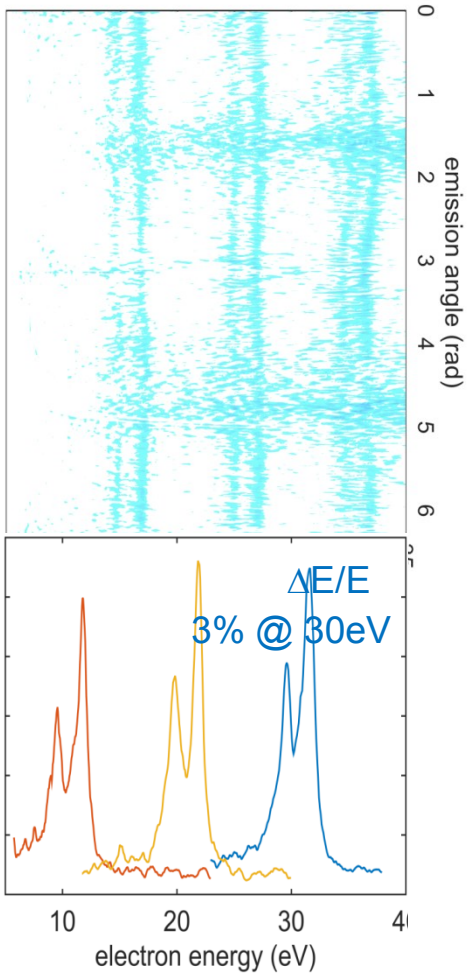


Ar 2p Auger, E ≤ 200 eV

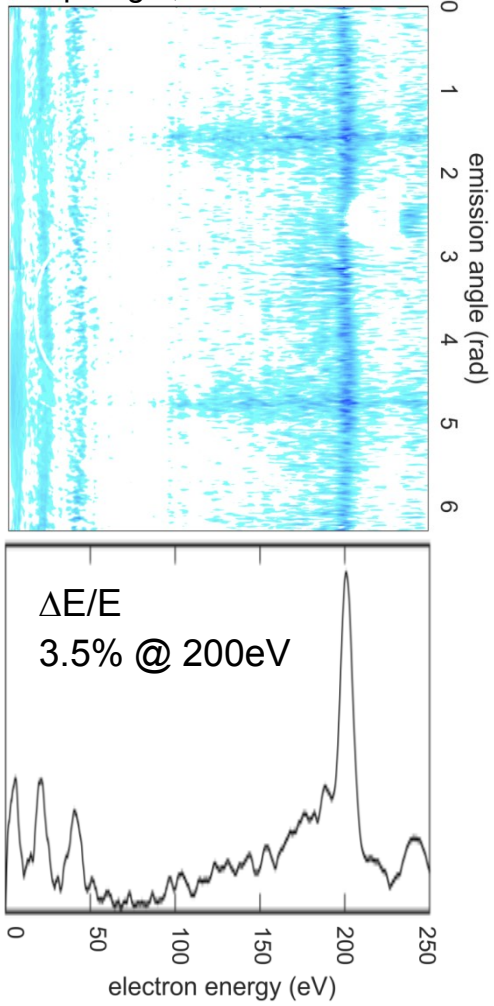

# Magnetic bottle spectrometer

- In-kind contribution from R.Feifel, Gothenburg
- Commissioning aimed for late 2017
- $4\pi$ sr acceptance, ≥95% collection up to 300 eV, Resolution $\Delta E/E \sim 2\%$
- Electrons-ions or electrons-electrons coincidence possible
- Rep. rate ≤120 kHz (electrons only), ≤20 kHz (electrons + ions)
- "Tried-and-tested" at many facilities (FERMI, LCLC, FLASH, SACLA, SOLEIL, …)

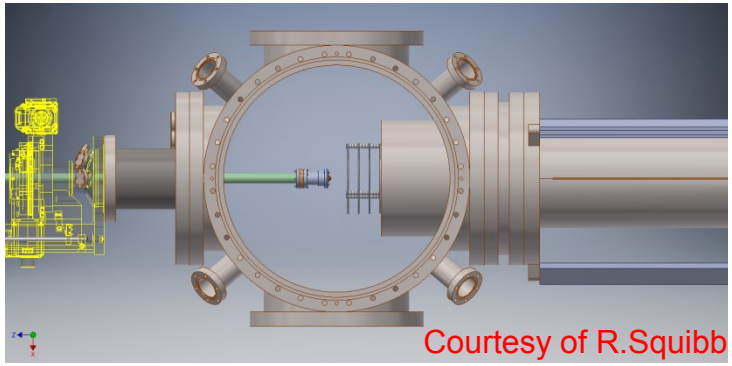


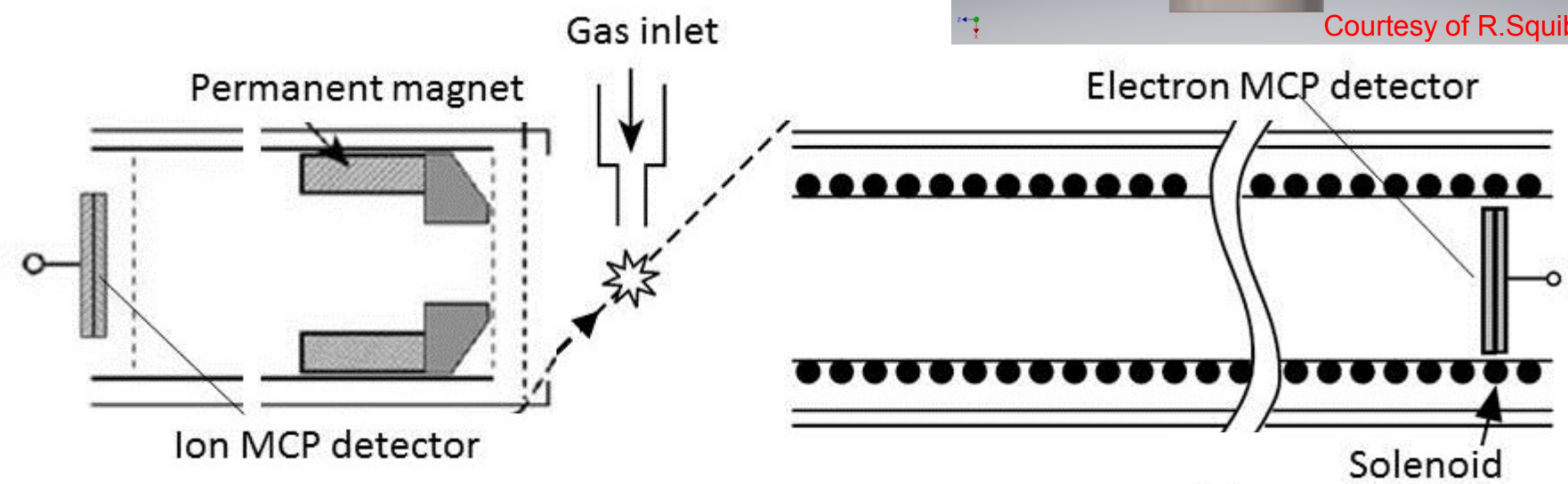




Kruit and Read *J. Phys. E.* **16** 313 (1993)
Eland and Feifel *Chemical Physics* **327** 85 (2006)

# 1D-imaging XUV spectrometer

- In-kind contribution from J.E. Rubensson, Uppsala

Please see next talk

# Fast DAQ

- Our unique time patter, 600µs @4.5MHz @10Hz is a blessing, but it's also a challenge!
- 4.5MHz SASE beam rules out "counting" electronics
- Solution: most DAQ based on fast digitizers + FPGA embedded algorithm
  - SPDevices ADC7, 14bit, 3GHz, 10GS/s

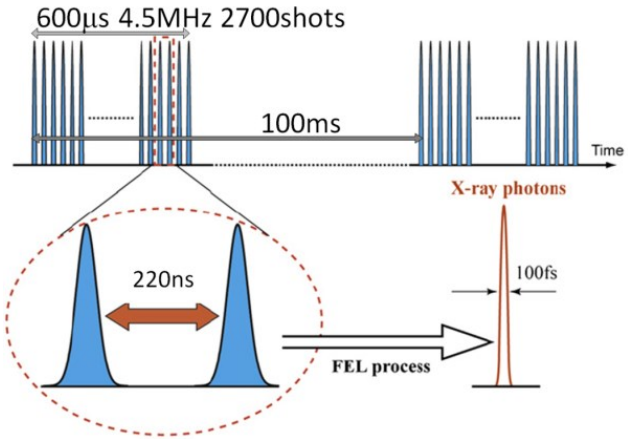


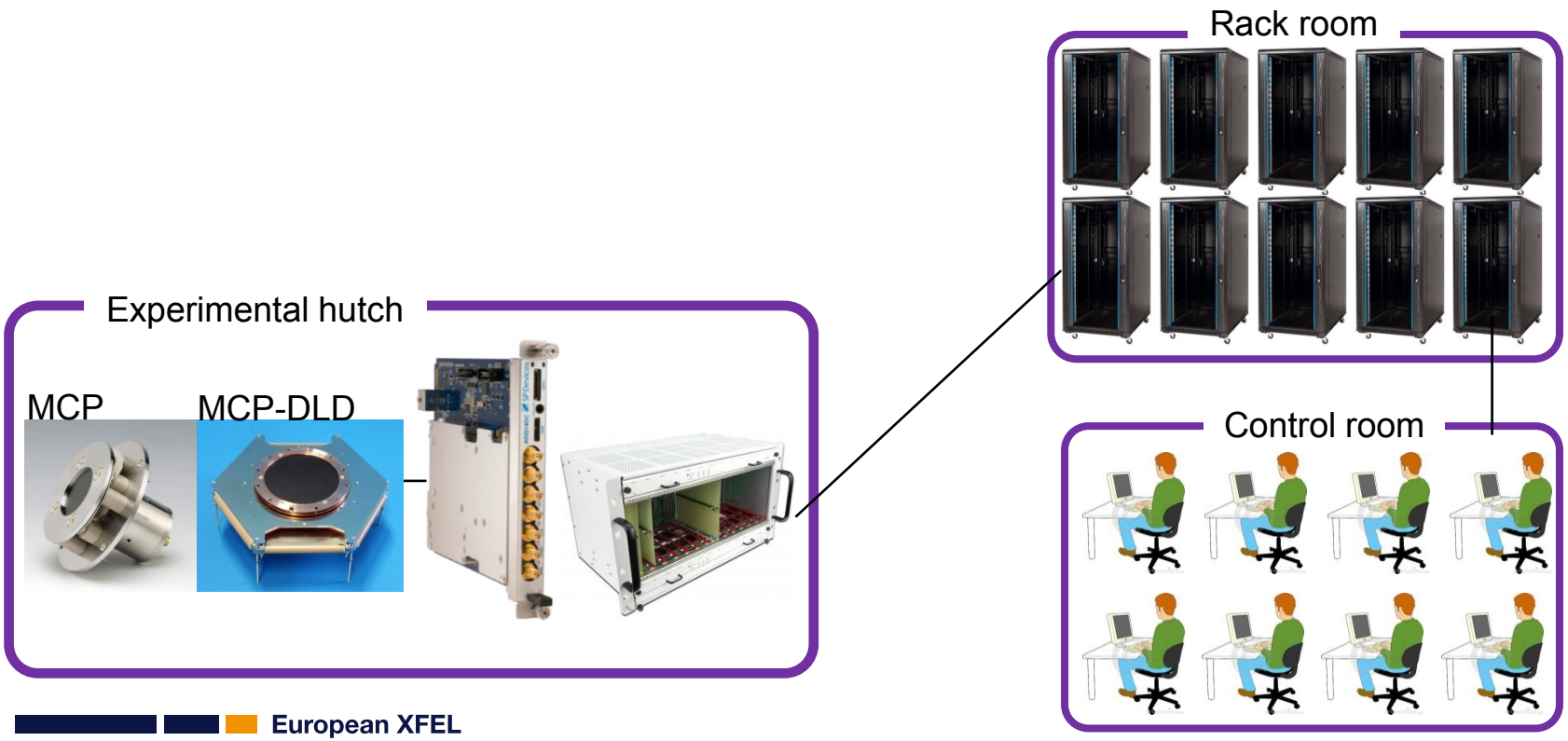

# AQS support: bottom

- Designed by Y.Ovcharenko with Newport, here now, users ready summer 2017.
- Stable steel welded structure
- Tripod uncoupled system for leveling Z vertical axis motion, a longitudinal X and lateral Y motion, 2 rotation axis Theta (X, Z) and 1 rotation axis Theta Y.

| | Range | Resolution | Repeatability | Speed |
|---|---|---|---|---|
| Travel X, Y | ≤100 mm | ≤ 1μm | ≤ 5 μm | ≤ 2 mm/s |
| Travel Z | ≤150 mm | ≤ 1μm | ≤ 5 μm | ≤ 0.2 mm/s |
| Rx Ry | ≤ 2° | ≤ 1m° | ≤ 5 m° | ≤ 0.01 m°/s |
| Rz | ≤ 2° | ≤ 1m° | ≤ 5 m° | ≤ 0.01 m°/s |

- Payload ≤1500 kg
- Foot print: ≤ 2100 x 1500 x 350 mm

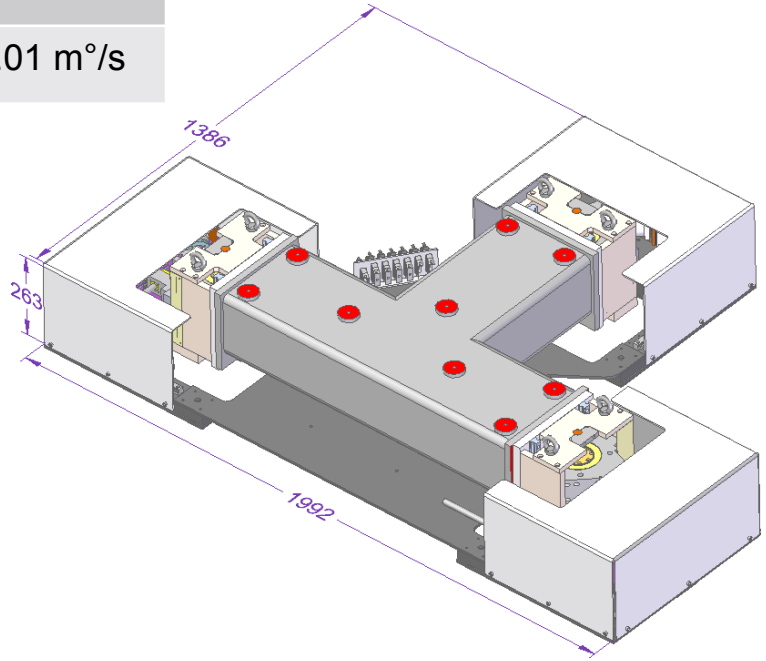

# AQS support: intermediate

- Designed by Y.Ovcharenko with Newport, due here Jan 2017, users ready summer 2017.
- Solid aluminium, welded
- ANSYS FEA analysis combined with real hall measurement: extent of vibrations can be tolerated

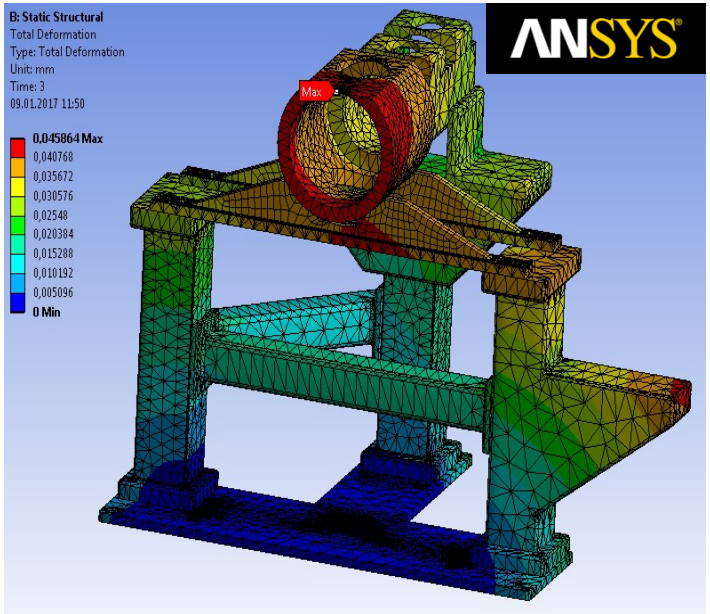


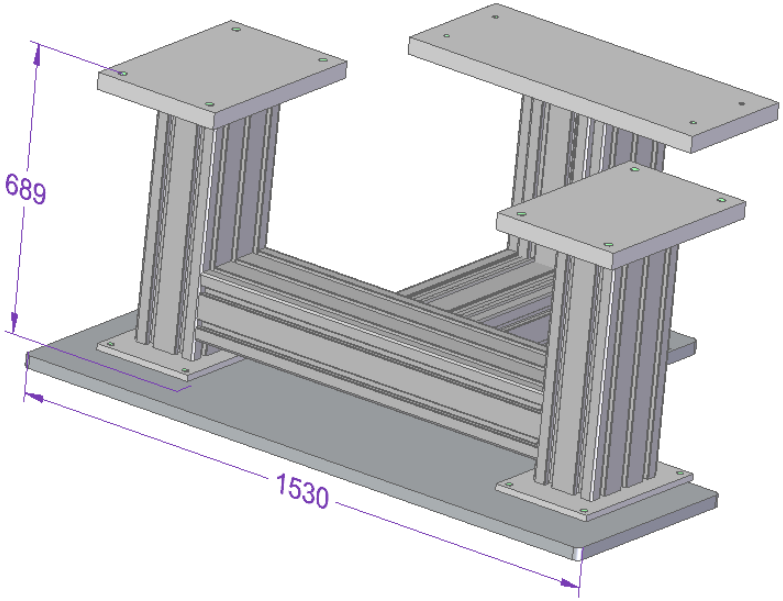

# AQS schedule

- Jan 2017: AQS vacuum tank ~~will arrive~~ has arrived
- Feb 2017: AQS mech. support arrives in Schenefeld
- March 2017: AQS non magnetic turbomolecular pumps arrive
- July 2017: Experimental hutch handed to us
- Aug 2017: eTOF #1-3 (dipole plane) ready
- Sept 2017: Hutch infrastructure ready
- Aug 2017: Diagnostic users' ready
- Sept 2017: VMI users' ready
- Dec 2017: eTOF #4-6 (non-dipole plane) ready
- Late 2017: MBES users' ready
- Late 2017: sublimation oven
- Early 2018: Wavefront sensor

- Early 2018 commissioning with beam

- Spring 2018 users' beamtime, TBC

# Thank you for attention

## The SQS team

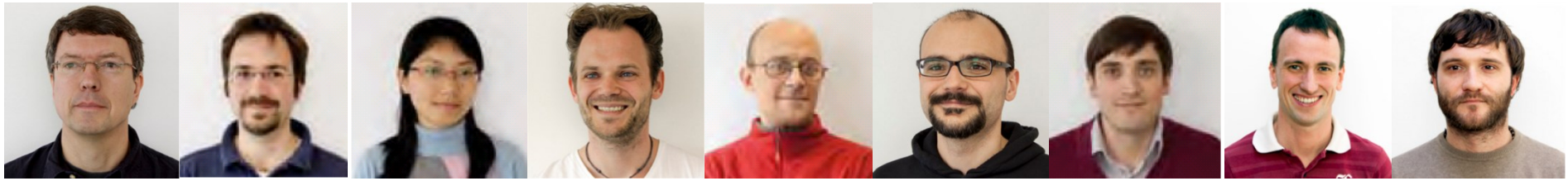

M. Meyer T. Mazza H.Zhang M.Ilchen A. De Fanis T.Baumann Y.Ovcharenko P. Grychtol P.Ziolkowski

- XFEL Advance Electronics
  - P.Gessler, N.Coppola, H.Sotoudi Namin
- XFEL Control & Analysis
  - D.Goeries, A. Parenti
- DESY, spectrometers commissioning
  - J.Viefhaus, J.Buck, G.Hartmann
- Uppsala, XUV spectrometer in-kind contribution
  - J.E. Rubensson, J. Nordgren
- Gothenburg, MBES spectrometer in-kind contribution
  - R.Feifel, R.Squibb